Nemalux™ INDUSTRIAL

AR-HAZ

rev. A-15

KEY FEATURES

- NSF Certified for use in Splash and Non-Food Zones
- Certified for use in Marine Locations (UL 1598A & ABS)
- Available with multiple distribution patterns
- Certified for Hazardous Locations, extreme water resistance and with corrosion protection for marine applications
- Thermally managed for maximum longevity
- Multiple mounting options
- Special powder coating for extreme resistance to chemical attack and aggressive cleaning agents and bio-cides used in food processing industries
- Low surface-energy coating and smooth surface texture prevent debris build-up and staining
- Available high Color Rendering Index (CRI) of 90+
- Vented enclosure ensures long-term reliability
- 0-10V Dimming 10%-100%
- DLC v4.3 Listed, qualifying for rebate and incentive programs in some areas
- IDA Dark Sky Approved to protect the night time environment and reduce light pollution

LISTED E477827 | LISTED E477829

TECHNICAL SPECIFICATIONS / MAXIMUM RATINGS

HOUSING	Die-cast Aluminium with Polycarbonate Lens
MOUNTING	Surface/Suspension mounting hardware included SEE PAGE 3 FOR ADDITIONAL MOUNTING OPTIONS
INPUT VOLTAGE	**AC**: 120-277VAC | **HV**: 347-480VAC (50/60Hz)
POWER (TYP)	SEE CHART ON PAGE 2
CURRENT (TYP)	SEE CHART ON PAGE 2
CONNECTIONS	2x 3/4" NPT
TEMPERATURE RANGE	SEE CHART ON PAGE 4
CERTIFICATIONS	Certified to UL 844, UL 8750, CSA 22.2 No. 137, CSA 22.2 No. 250.0, CSA 22.2 No. 250.13; NSF-2: Splash and Non-Food Zones Class I, Division 2, Groups ABCD; Class II, Division 2, Groups FG; Class III; Class I, Zone 2, Groups IIC; Class I, Zone 22, Groups IIIB
INGRESS PROTECTION	IP66/67 Suitable for wet locations. Marine Outside type (Salt water).
COLOUR TEMP RANGE	**50/50H**: 5000K | **35/35H**: 3500K | Special Order: 2700-6500K
CRI VALUE (MIN)	**50**: 70 | **50H**: 90 | **35**: 80 | **35H**: 90
TOTAL LUMENS	SEE CHART ON PAGE 2
LUMEN MAINTENANCE	LM-80 > 100,000 hrs (Based on CREE long term testing)
WEIGHT	16.4 kg | 36 lbs

* The ambient temperature during lifetime, lumen and chromaticity determination is 25°C ± 1°C

DIMENSIONS

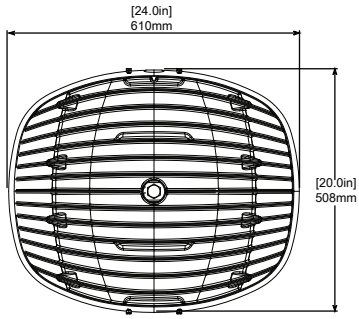

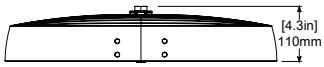

WARRANTY

Five (5) year limited warranty to the original purchaser. The warranty covers defects in materials and workmanship under normal use and service.

For additional information see:
http://www.nemalux.com/company/warranty-policy/

ELECTRICAL RATINGS

AC - UNIVERSAL INPUT MODELS							
LUMINANCE	RATED VOLTAGE [Volts]	FREQUENCY [Hz]	RATED WATTAGE [Watts]	TYPICAL WATTAGE - FLOOD MODELS [Watts]		TYPICAL WATTAGE - OPTIC MODELS [Watts]	
				@120VAC	@277VAC	@120VAC	@277VAC
AR10	120-277	50/60	107	88.8	91.8	96.9	99.2
AR15	120-277	50/60	145	119.5	121.6	130.0	131.7
AR20	120-277	50/60	190	156.3	157.0	170.0	170.6
AR25	120-277	50/60	247	209.7	208.1	224.9	222.7
AR30	120-277	50/60	312	277.7	274.4	297.0	292.9
HV - HIGH VOLTAGE INPUT MODELS							
LUMINANCE	RATED VOLTAGE [Volts]	FREQUENCY [Hz]	RATED WATTAGE [Watts]	TYPICAL WATTAGE - FLOOD MODELS [Watts]		TYPICAL WATTAGE - OPTIC MODELS [Watts]	
				@ 347VAC	@ 480VAC	@ 347VAC	@ 480VAC
AR10	347-480	50/60	129	113.0	118.3	121.9	127.0
AR15	347-480	50/60	145	135.6	140.6	145.7	150.6
AR20	347-480	50/60	187	171.5	193.8	180.5	183.3
AR25	347-480	50/60	248	224.6	228.4	238.3	241.9
AR30	347-480	50/60	310	287.3	289.5	297.6	297.4

OPTIC OPTIONS

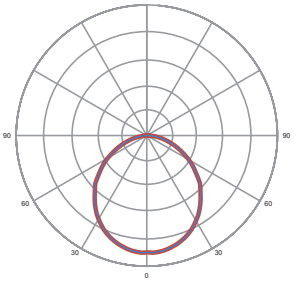

WC - Wide Beam (No Optics)

MODEL	LUMENS	LUMENS/WATT
AR10	12270	140
AR15	16490	140
AR20	20730	134
AR25	26610	129
AR30	33190	121

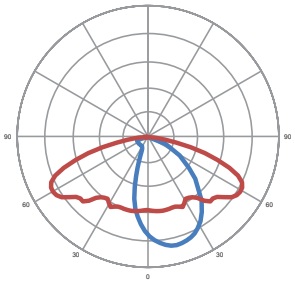

T2 - IESNA Type 2

MODEL	LUMENS	LUMENS/WATT
AR10	12370	132
AR15	16340	130
AR20	20560	125
AR25	26090	117
AR30	31670	109

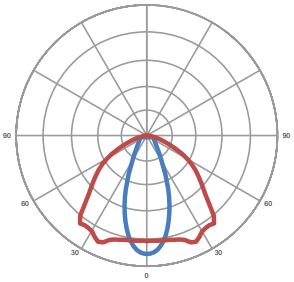

OC - Oval 26° x 108°

MODEL	LUMENS	LUMENS/WATT
AR10	12260	127
AR15	16200	127
AR20	20380	124
AR25	25860	119
AR30	31400	109

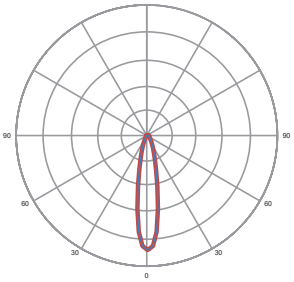

SC- Spot 18°

MODEL	LUMENS	LUMENS/WATT
AR10	12330	128
AR15	16290	128
AR20	20500	125
AR25	26020	119
AR30	31590	110

Note: Standard offering above, 13 alternate optical profiles available upon request.
Contact Nemalux Sales representative for further details. Minimum order quantities, additional costs and lead times may incur.

PHOTOMETRICS

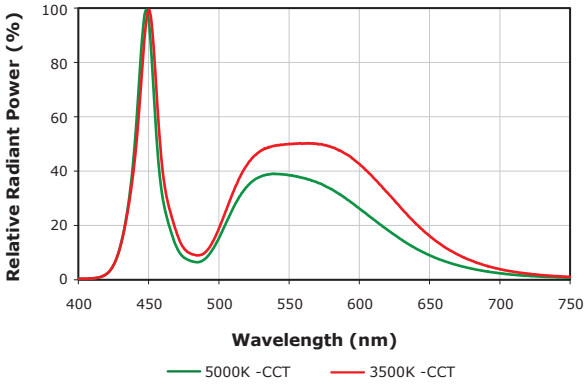

DIMMING

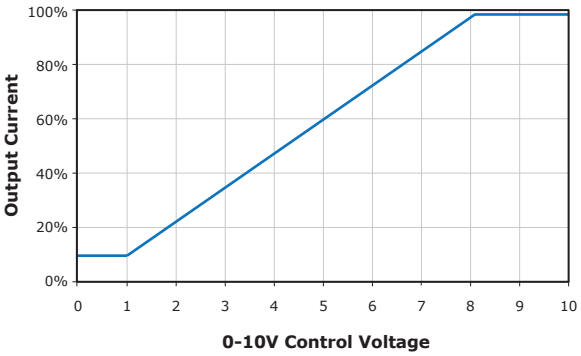

- Driver will source a maximum of 200uA for control needs
- Controller must sink current from the 0-10V control leads

MOUNTING OPTIONS

SURFACE/SUSPENDED MOUNT : 16.8 kg | 37 lbs (Included Standard)

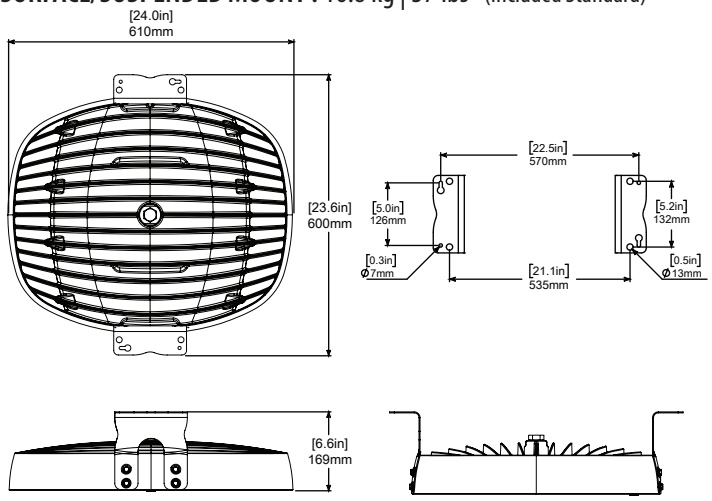

POLE MOUNT (AR-PM) : 17.3 kg | 38 lbs (Optional accessory)

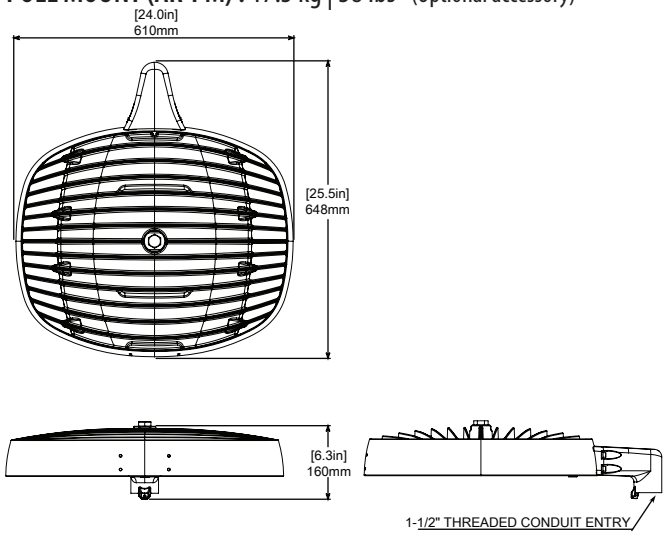

WALL MOUNT (AR-WM) : 17.7 kg | 39 lbs (Optional accessory)

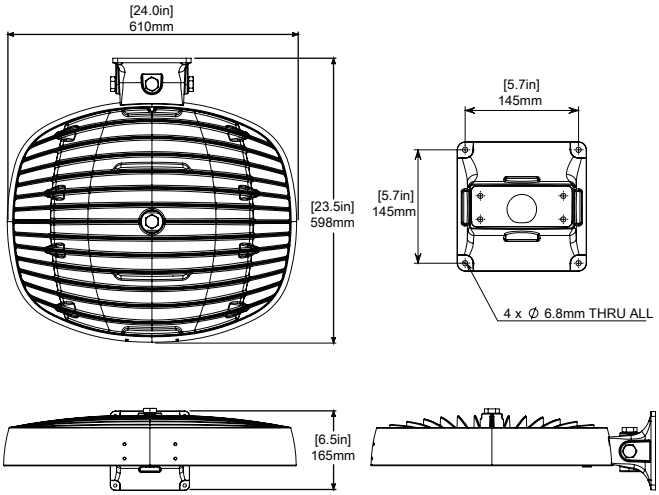

HANGING PENDANT (AR-HK) : 16.4 kg | 36 lbs (Optional accessory)

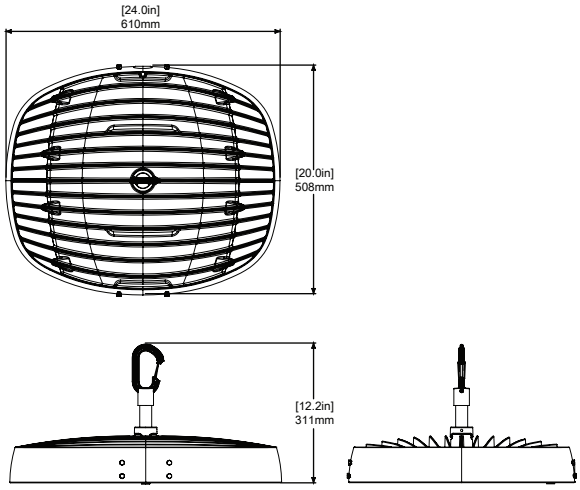

YOKE MOUNT (AR-YM) : 16.8 kg | 37 lbs (Optional accessory)

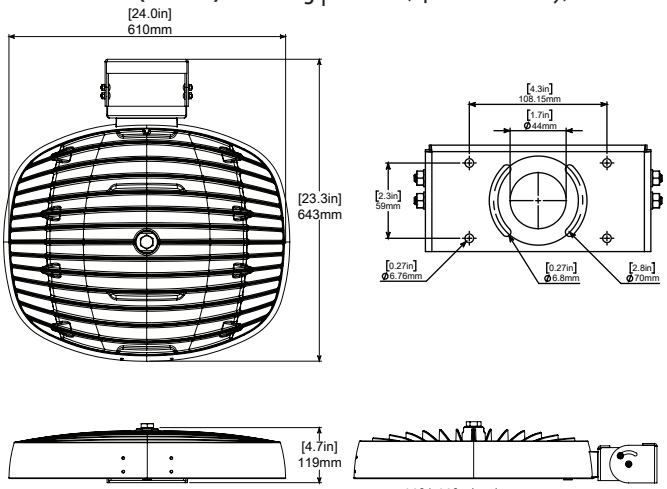

+90°/-90° tilt adjustment

HIGH VIBRATION YOKE (AR-YK) : 20.5 kg | 45 lbs (Optional accessory)

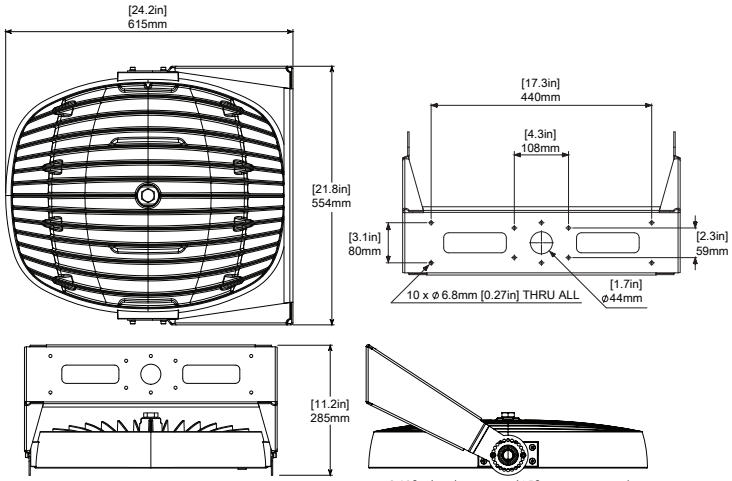

360° tilt adjustment (15° incremements)

MOUNTING OPTIONS (Cont.)

SECONDARY SAFETY KIT (AR-SK-##) (Optional accessory)

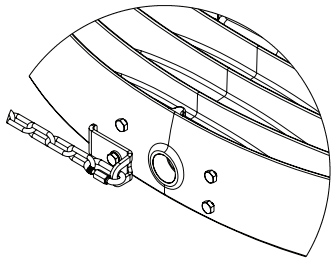

represents the safety chain length in feet (i.e. 05=5', 10=10').
Secondary Safety Kit contains bracket, stainless steel chain (1/8 trade size), and two stainless steel oval threaded connecting links.

TEMPERATURE RANGE CHART:

		OPTICAL MODELS		FLOOD MODELS		ALL MODELS
LUMINANCE	INPUT VOLTAGE	AMBIENT TEMP [°C]	CLASS I, DIV 2 T-CODES	AMBIENT TEMP [°C]	CLASS I, DIV 2 T-CODES	CLASS II, DIV 2 T-CODES
AR10	AC	-40 to 55	T3C	-40 to 55	T4A	T5
	HV	-40 to 54	T3C	-40 to 51	T4	T5
AR15	AC	-40 to 55	T3C	-40 to 55	T4A	T5
	HV	-40 to 54	T3C	-40 to 51	T4	T5
AR20	AC	-40 to 55	T3C	-40 to 55	T4A	T5
	HV	-40 to 54	T3C	-40 to 51	T4	T5
AR25	AC	-40 to 51	T3C	-40 to 55	T4A	T5
	HV	-40 to 44	T3B	-40 to 50	T4A	T5
AR30	AC	-40 to 43	T3	-40 to 42	T4A	T5
	HV	-40 to 43	T3	-40 to 40	T3	T5

ORDERING INFORMATION

PROJECT NAME		TYPE
PROJECT LOCATION		
COMMENT		DATE
PREPARED BY		

MODEL SELECTOR

Sample Number: AR30-35-WC-WT-HZ-AC

MODEL	COLOUR	OPTIC	FINISH	LOCATION	POWER
-	-	-	WT -	HZ -	
AR10 **AR15**[7] **AR20**[7] **AR25**[7] **AR30**[7]	**35** - 3500K **35H** - 3500K High CRI **50** - 5000K **50H** - 5000K High CRI Special Order: **27** - 2700K[1,5] **27H** - 2700K High CRI[1,5] **30** - 3000K[1,5] **30H** - 3000K High CRI[1,5] **40** - 4000K[1] **40H** - 4000K High CRI[1] **57** - 5700K[1] **57H** - 5700K High CRI[1] **65** - 6500K[1] **65H** - 6500K High CRI[1]	**WC** - Wide Beam (No optics) **T2** - IESNA Type 2 **OC** - Oval 26° x 108° **SC** - Spot 18° Special Order: **T1** - IESNA Type 1[1] **T3** - IESNA Type 3[1] **T4** - IESNA Type 4[1] **T5** - IESNA Type 5[1] **TC** - Tight 32°[1] **MC** - Medium 50°[1] **PX** - Asymmetric 20° x 80° w/ 45° forward kick[1] **FN** - Asymmetric 90° x 22° w/ 45° forward kick[1] **2W** - Asymmetric 135° x 55° w/ 25° forward kick[1] **3W** - Asymmetric 155° x 55° w/ 30° forward kick[1] **W1** - Asymmetric 150° x 52° w/ 30° forward kick[1] **DN** - Asymmetric 105° x 55° w/ 25° forward kick[1] **XW** - Asymmetric 135° x 170° w/ 75° forward kick[1]	**WT** - White Custom finishes available. Please contact for details.[1,2]	**HZ** - Hazardous Locations[3]	**AC** - 120-277VAC **HV** - 347-480VAC

ACCESSORIES (Order Separately)

Sample Number: AR-WM-WT

ACCESSORY	FINISH
-	WT
AR-WM - Wall Mount[5] **AR-HK** - Hanging Pendant **AR-PM** - Pole Mount[5] **AR-YM** - Yoke Mount[4,5] **AR-YK** - High Vibration Yoke[2,4,5] **AR-SK-##** - Secondary Safety Kit[4,6]	**WT** - White Custom finishes available. Please contact for details.[1,2]

NOTES:

1. *Minimum order quantities, additional costs and lead times may incur.*
2. *Custom finishes and High Vibration Yoke mount are not available for NSF certified units.*
3. *Hazardous location is also NSF compliant.*
4. *Only available in stainless steel finish.*
5. *IDA Fixture Seal of Approval only applies to fixtures with a CCT of 3000K or less, and have fixed mounts aiming the fixture perpendicular to the ground.*
6. *## represents the safety chain length in feet (i.e. 05=5', 10=10'). Secondary Safety Kit contains bracket, stainless steel chain (1/8 trade size), and two stainless steel oval threaded connecting links.*
7. *DLC Listed models:*

DesignLights Consortium (DLC) v4.3 Qualified LED Luminaire Listings			
Model No.	*Category*	*General Application*	*Classification*
AR10-50-WC-xx-xx-[AC,HV]	*Outdoor Luminaires*	*High Output*	*DLC Premium*
	Indoor Luminaires	*High-Bay*	*DLC Premium*
AR15-50-WC-xx-xx-[AC,HV]	*Outdoor Luminaires*	*High Output*	*DLC Premium*
	Indoor Luminaires	*High-Bay*	*DLC Premium*
AR20-50-WC-xx-xx-[AC,HV]	*Outdoor Luminaires*	*High Output*	*DLC Premium*
	Indoor Luminaires	*High-Bay*	*DLC Premium*
AR25-50-WC-xx-xx-[AC,HV]	*Outdoor Luminaires*	*High Output*	*DLC Premium*
	Indoor Luminaires	*High-Bay*	*DLC Standard*
AR30-50-WC-xx-xx-[AC,HV]	*Outdoor Luminaires*	*Very High Output*	*DLC Premium*
	Indoor Luminaires	*High-Bay*	*DLC Standard*